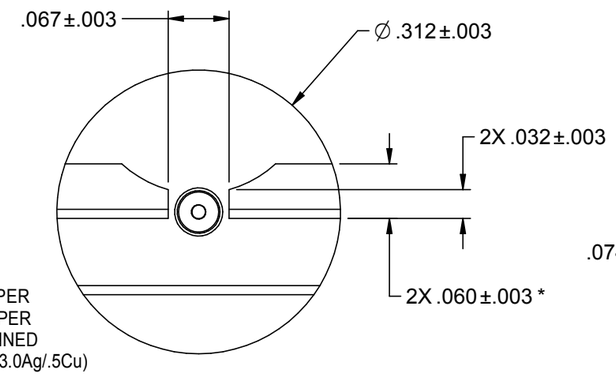

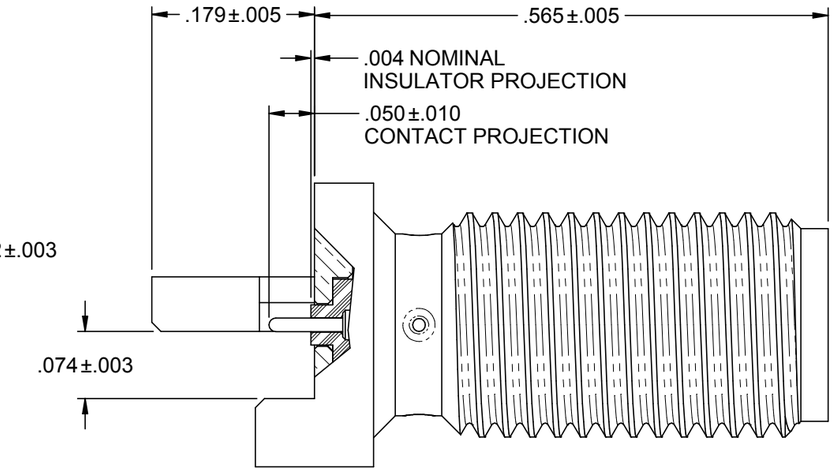

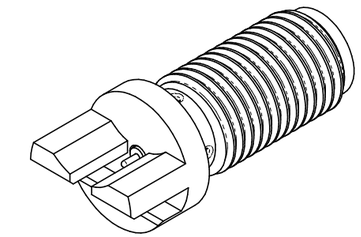

NOTES: UNLESS OTHERWISE SPECIFIED.

1. MATERIALS AND PLATING:
   1.1 BODY: (142-0781-821) GOLD PLATED BRASS
   (142-0781-822) GOLD PLATED BRASS
   1.2 INSULATOR: (142-0781-821) TEFLON
   (142-0781-822) TEFLON
   1.3 CENTER CONTACT: (142-0781-821) GOLD PLATED BERYLLIUM COPPER
   (142-0781-822) GOLD PLATED BERYLLIUM COPPER
   EXPOSED CENTER PIN PRE-TINNED
   WITH SAC 305 SOLDER (96.5Sn/3.0Ag/.5Cu)

2. ELECTRICAL SPECIFICATIONS:
   2.1 IMPEDANCE: 50 OHMS
   2.2 FREQUENCY RANGE: 0-26.5 GHz
   2.3 VSWR: 1.05+.02F(GHz) MAX AT 0-18 GHz, TYPICALLY < 1.50 AT 18-26.5 GHz
   2.4 WORKING VOLTAGE: 170 VRMS MAX AT SEA LEVEL
   2.5 DIELECTRIC WITHSTANDING VOLTAGE: 500 VRMS MIN AT SEAL LEVEL
   2.6 INSULATION RESISTANCE: 1000 MEGOHMS MIN
   2.7 CONTACT RESISTANCE: CENTER CONTACT - INITIAL 3.0 MILLIOHMS MAX,
   AFTER ENVIRONMENTAL - 4.0 MILLIOHMS MAX
   OUTER CONDUCTOR - INITIAL 2.0 MILLIOHMS MAX
   AFTER ENVIRONMENTAL - N/A
   2.8 CORONA LEVEL: 125 VOLTS MIN AT 70,000 FEET
   2.9 INSERTION LOSS: N/A (DEPENDANT UPON APPLICATION)
   2.10 RF HIGH POTENTIAL WITHSTANDING VOLTAGE: 335 VRMS MIN AT 4 AND 7 MHz

3. MECHANICAL SPECIFICATIONS:
   3.1 ENGAGEMENT/DISENGAGEMENT TORQUE: 2 INCH POUNDS MAX
   3.2 MATING TORQUE: 7-10 INCH POUNDS WHEN SUPPORTED WITH WRENCH
   *8 INCH-POUNDS MAX UNSUPPORTED
   3.3 CONTACT RETENTION: 6 LBS MIN AXIAL FORCE
   4 OZ-IN MIN RADIAL TORQUE
   3.4 DURABLITY: 500 CYCLES MIN

4. ENVIRONMENTAL SPECIFICATIONS:
   4.1 (MEETS OR EXCEEDS THE APPLICABLE PARAGRAPH OF MIL-PRF-39012)
   4.2 THERMAL SHOCK: MIL-STS-202, METHOD 107, CONDITION B,
   4.3 EXCEPT 115°C HIGH TEMP
   4.4 OPERATING TEMPERATURE: -65°C TO 165°C
   4.5 CORROSION: MIL-STD-202, METHOD 101, CONDITION B
   4.6 SHOCK: MIL-STD-202, METHOD 213, CONDITION I
   4.7 VIBERATION: MIL-STD-202, METHOD 204, CONDITION D
   4.8 MOISTURE RESISTANCE: MIL-STD-202, METHOD 106

5. ALL HOLES PLATED THRU ENTIRE CIRCUIT BOARD STACKUP.

6. HOLE PATTERNS SYMMETRICAL ABOUT CENTER OF CPW TRACE.

7. FOR OPTIMUM CIRCUIT BOARD HIGH FREQUENCY PROFORMANCE:
   A. MAINTAIN SOLID GROUND PLANE BELOW HIGH FREQUENCY SUBSTRATE.
   B. CONTROL PULLBACK OF TRACE AND GROUND FROM BOARD EDGE.
   C. CONTINUE GROUNDED COPLANAR LINE BEYOND GROUND PADS.
   D. PLACE 16 MIL DIA GROUND VIAS ON BOTH SIDES OF COPLANAR
   WAVEGUIDE LINE AT 50 MIL INTERVALS ALONG ENTIRE LENGTH.
   E. IMMERSION GOLD PLATE (ENIG) ALL CONDUCTORS PER IPC-4552.

8. REFERENCE DIMENSIONS FOR 50 OHM GROUNDED CPW LINE, USING
   ROGERS R04003, 16 MIL HIGH FREQUENCY CIRCUIT BOARD SUBSTRATE:
   TRACE WIDTH - 28.5 MILS
   GROUND GAPS - 10 MILS
   CONDUCTOR THICKNESS - 1.4 MIL (INCLUDES PLATING)

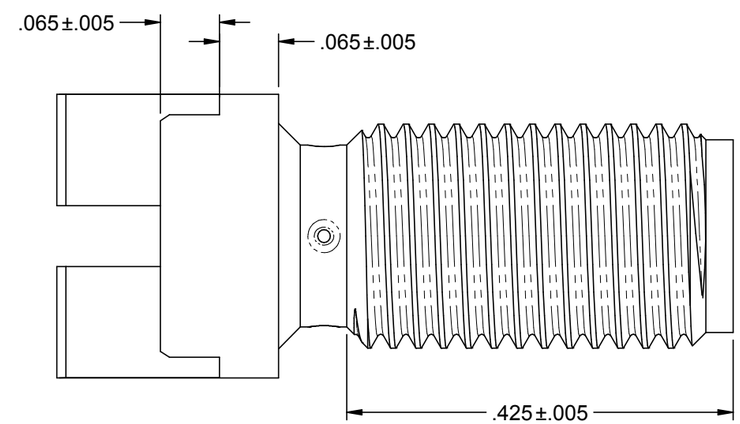

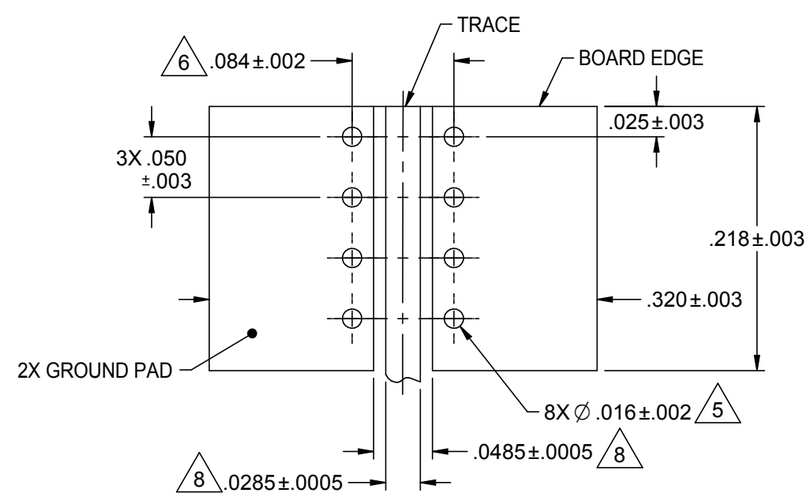

MOUNTING FOOTPRINT
(TOP VIEW, INCLUDING TRACE DIMENSIONS)

cinch CONNECTIVITY SOLUTIONS a bel group	3RD ANGLE PROJECTION	**JOHNSON**
This PROPRIETARY Document is property of Cinch Connectivity Solutions. It is confidential in nature, non-transferable, and understands the user's undertaking that it is not traced or copied without permission and is returnable upon demand. INTERPRET DRAWING IN ACCORDANCE WITH ASME Y14.5-2009.	RoHS2 2011/65/EU UNLESS OTHERWISE SPECIFIED UNITS: INCH	Title: HIGH FREQ END LAUNCH SMA BKHD JACK ASSEMBLY, EDGE MOUNT, 15 MIL PIN
		Model No. 142-0781-821/830
		Size B · DO NOT SCALE DRAWING · Date: 5/19/2015 · Sheet 1 of 1